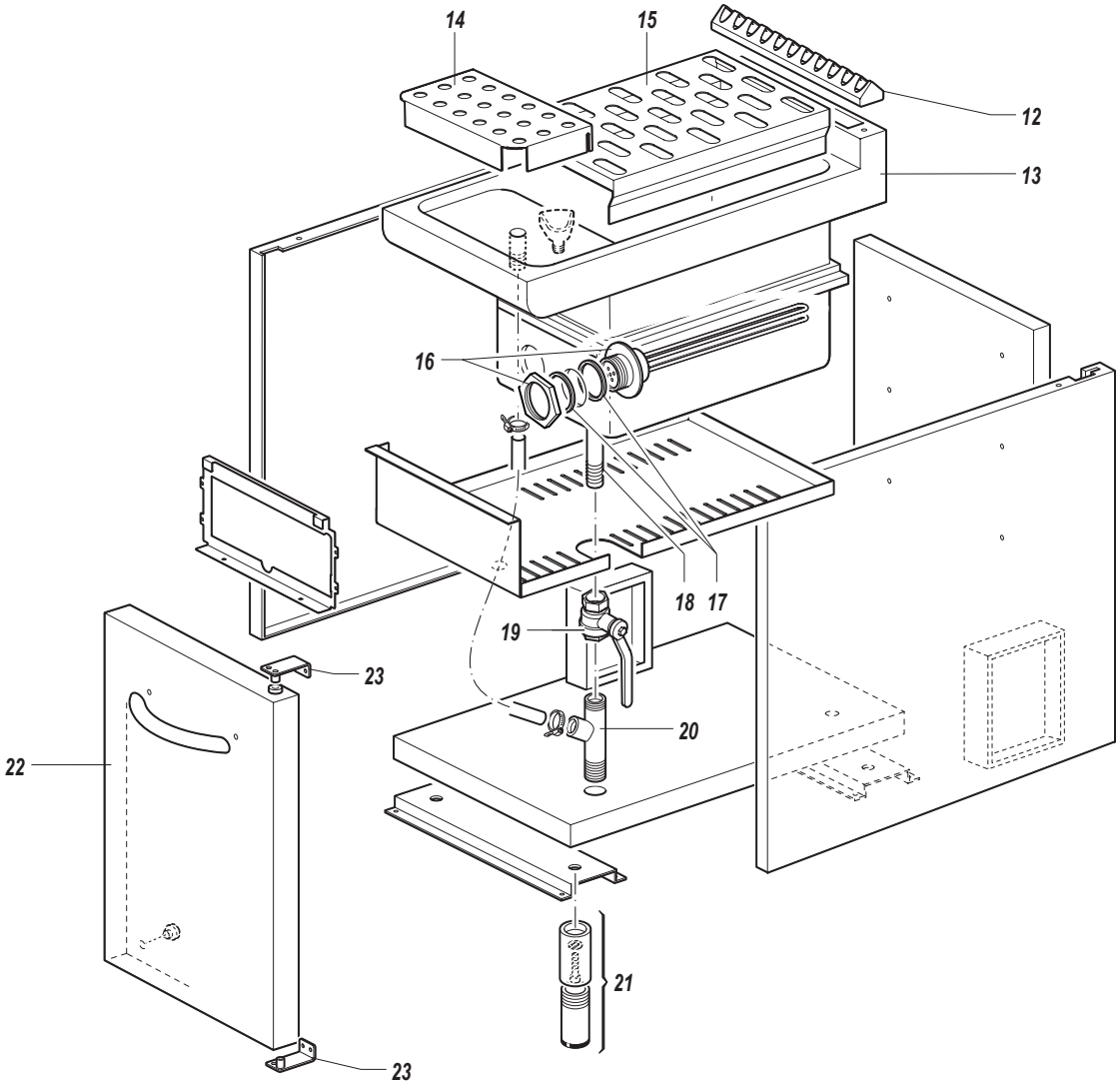
14
15
12
13
16
18
17
19
20
23
22
21
23

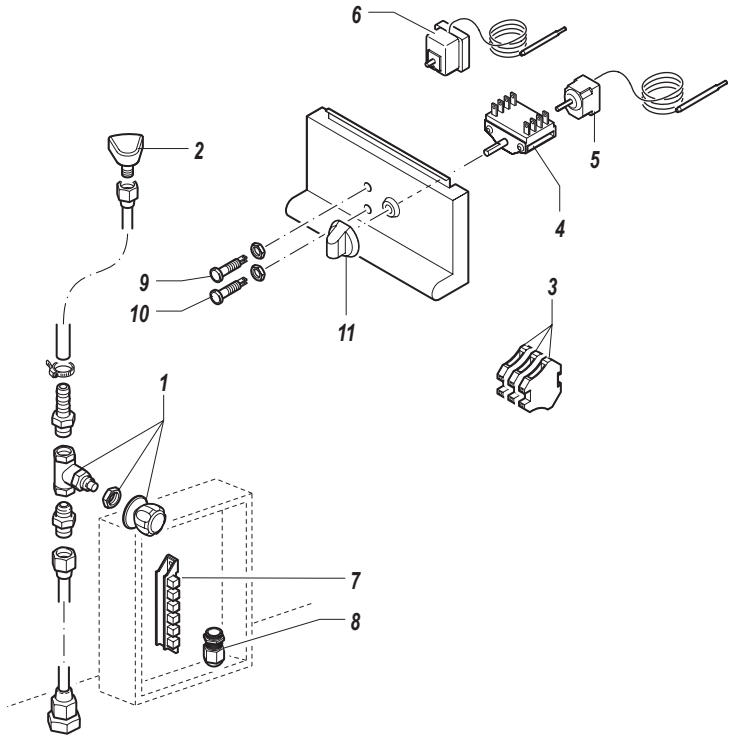
6
2
5
4
9
10
11
3
1
7
8

RIF.	CODICE	R.C.	DENOMINAZIONE	DESCRIPTION	BESCHREIBUNG	DESIGNATION	DENOMINACIONES
1	25/99900219		RUBINETTO INCASSO	BUILT IN WATER TAP	EINGEBAUTER WASSERHAHN	ROBINET ENCASTRABLE DROIT	GRIFO
2	25/99900449		EROGATORE ACQUA	WATER DISPENSER	WASSERSPENDER	ELEMENT D'EROGATION FIXE	DISPENSADOR AGUA
3	14/16530029		MORSETTO UNIVERSALE	CONTRACTOR	FERNSCHALTER	TELERUPTEUR	TELERRUPTOR
4	09/85900009	*	COMMUTATORE TERMOSTATO	SWITCH FOR THERMOSTAT	SCHALTER FÜR THERMOSTAT	COMMUTATEUR POUR THERMOSTAT	CONMUTADOR PARA TERMOSTATO
5	08/99600079	*	TERMOSTATO DI LAVORO	WORK THERMOSTAT	ARBEITSTHERMOSTAT	THERMOSTAT DE TRAVAIL	TERMOSTATO DE TRABAJO
6	08/99600089	*	TERMOSTATO DI SICUREZZA	SAFETY THERMOSTAT	SICHERHEITSTHERMOSTAT	THERMOSTAT DE SECURITE	TERMOSTATO DE SEGURIDAD
7	14/99900750		MORSETTIERA A 6 POLI	6 POLE TERMINAL	SECHSPOLIGER KLEMMENBRETT	TERMINALE 6 POLES	TERMINAL DE CONEXION 6 POLOS
8	14/99902079		PRESSACAVO PG21	FLAT FAIRLEAD PG21	KABELFÜHRUNG PG21	PASSE-CABLE PG21	PROTECTOR DE CABLE PG21
9	14/99901620		SPIA VERDE	GREEN WARNING LIGHT	GRÜNE LAMPE	LUMIERE VERTE	LUZ VERDE
10	14/99901621		SPIA ARANCIONE	ORANGE WARNING LIGHT	ORANGE LAMPE	LUMIERE ORANGE	LUZ NARANJA
11	29/99701019	*	MANOPOLA SILVER	SILVER KNOB	SILBERNER KNEBEL	POIGNEE ARGENT	POMO SILVER
12	23/99700044		GRIGLIA SCARICO FUMI	FLUE GRILL	ABGASGITTER	GRILLE FUMEE	REJILLA SALIDA HUMOS
13	WD/99600479		PIANO COMPLETO DI VASCA	TOP COMPLETE WITH SINK	FLÄCHE MIT BECKEN	PLAN AVEC CUVE	PLAN CON CUBA
14	23/99909199		SUPPORTO CESTELLI INOX	BASKET STAINLESS STEEL SUPPORT	EDELSTAHL KORBHALTER	SUPPORT EN ACIER INOX POUR PANIERS	SOPORTE EN ACERO INOX PARA LAS CESTAS
15	23/99604999		FALSO FONDO INOX	FALSE BOTTOM INOX	FALSCHER EDELSTAHLBODEN	FAUX FOND EN ACIER INOX	SOPORTE EN ACERO INOX
16	07/99600230	*	RESISTENZA A IMMERSIONE	RESISTOR	RESISTOR	RESISTANCE	RESISTENCIA
16	07/99900130	*	GHIERA	RING NUT FOR RESISTOR	RINGMUTTER FÜR RESISTOR	ANNEAU POUR RESISTANCE	ANILLO DE LA RESISTENCIA
17	07/99900131		GUARNIZIONE	SILICON GASKET	SILIKONDICHTUNG	JOINT EN SILICONE	JUNTA EN SILICONA
18	63/99000190		TRONCHETTO DRITTO	DISCHARGE COUPLER	EDELSTAHLSTIEFELAUSPUFF	DECHARGE COUPLER	ENGANCHE DE DRENAJE
19	14/99700014		RUBINETTO A SFERA ACQUA	DRAIN VALVE	RUNDVENTIL FÜR WASSER	VALVE RONDE	VALVULA DE ESFERA
20	18/99600089		COLLETTORE DI SCARICO	DRAINAGE PIPE	AUSPUFFVERTEILER	TUBE DE DECHARGEMENT	DESAGUE
21	15/99901801		PIEDINO REGOLABILE	ADJUSTABLE FOOT	EINSTELLBARER FUSS	PIED REGLABLE	PIE REGULABLE
22	WP/99700060		PORTA	DOOR	TÜR	PORTE	PUERTA
23	23/99600400		CERNIERA PORTA	FIXING ELEMENT FOR DOOR	TÜRSCHARNIER	CHARNIERE POUR PORTE	BISAGRA PARA PUERTA